B. V. V. Sangha's

BASAVESHWAR ENGINEERING COLLEGE BAGALKOT
2025-26

DEPARTMENT OF ELECTRONICS AND COMMUINCATIONS

REPORT ON-

Real Time Braille Converter For Digital Content

Coordinators

Dr. Mamata J. Sataraddi

Dr. Basavaraj M. Angadi

Project Guide

Dr. Anand .H .U

HOD

Dr.Mahabaleshwar S.K

Project Associates

Krutika S Hatapakki[2BA23EC048]

Rakshita Kadole[2BA23EC079]

Manoj R[2BA23EC054]

Manoj S Hugar[2BA23EC055]

B. V. V. Sangha's

BASAVESHWAR ENGINEERING COLLEGE BAGALKOTE - 587102

2025-2026

DEPARTMENT OF ELECTRONICS AND COMMUNICATION ENGINEERING

CERTIFICATE

This is to certify that the mini project report entitled "Real Time Braille Converter For Digital Content" submitted by Krutika Hatapakki[2BA23EC048], Rakshita Kadole [2BA23EC079], Manoj R [2BA23EC054], Manoj S Hugar [2BA23EC055] studying in V semester during the year 2025-26. Basaveshwar Engineering College, Bagalkote, in partial fulfillment for the award of degree of Engineering in Electronics and Communication Engineering is a Bonafide record work done by them under my supervision.

GUIDE	**HOD**	**PRINCIPAL**
Dr.Anand H U	Dr.Mahabaleshwar S.K	Dr.B.R.Hiremath

Examiner	**Name of Examiner**	**Signature**
HOD/Nominee	_____	_____
Internal Examiner	_____	_____
External Examiner	_____	_____

ACKNOWLEDGEMENT

The satisfaction that accompanies the successful completion of this project would be incomplete without the mention of the people who made it possible, without whose constant endurance and encouragement would have made efforts go in vain. We considered privileged to mess gratitude and respect towards all those who guided us through the completion of this project. We convey thanks to our project guide **Dr.Anand H U sir** Department of Electronics and Communication Engineering, for their support and advice to get and complete the project on **"Real time Braille Converter for Digital Content" .**

We would like to thank project Co-ordinators **Dr. B. M. Angadi** & **Dr. M.J.Sataraddi** Department of Electronics and Communication Engineering, for providing encouragement, constant support and guidance which was of a great help to complete the project successfully.

We are grateful to **Dr.Mahabaleshwar S.Kakkasageri** Professor and Head of Department of Electronics and Communication Engineering, for giving us the support and encouragement that was necessary for completion of this project. We would also like to express our gratitude to **Dr. B. R. Hiremath** Principal, Basaveshwar Engineering College for providing us congenial environment to work in. We grateful to faculty and staff members of Department of Electronics and Communication Engineering, for providing the facilities which have helped in making this project a success. Finally, we would like to thank our parents, friends and who helped to complete this project directly and indirectly, for their constant encouragement with moral and material support.

1)Krutika S Hatapakki
2)Rakshita Kadole
3)Manoj R
4)Manoj S Hugar

ABSTRACT:

This project presents the development of a highly cost-effective, real-time text-to-Braille conversion system aimed at significantly improving accessibility and literacy for visually impaired individuals. Traditional refreshable Braille displays, although effective, remain prohibitively expensive for many users and institutions, especially in resource-limited settings. To address this challenge, the proposed system integrates readily available hardware components with modern software capabilities to create an affordable, portable, and user-friendly assistive technology solution.

The system employs an optical character recognition (OCR) module embedded within a custom-built mobile application, which enables the user to capture printed text using a smartphone camera. The application preprocesses the image, performs text extraction, and achieves an impressive OCR accuracy exceeding 95% for standard printed documents. The recognized text is then transmitted to the hardware module using USB OTG–based serial communication, ensuring reliable and low-latency data transfer between the smartphone and the microcontroller.

At the hardware level, an Arduino Uno microcontroller decodes the received characters into Grade-1 Braille patterns, ensuring full compliance with standard Braille encoding rules. These Braille patterns are physically rendered using six push-pull solenoid actuators arranged in the conventional 2×3 Braille cell configuration. Each solenoid is driven by a TIP122 Darlington transistor circuit, enabling efficient actuation, fast response time, and robust protection of the microcontroller pins. The mechanical implementation is optimized for simplicity, durability, and low manufacturing cost, allowing the device to operate as a tactile refreshable Braille cell without the need for costly piezoelectric components traditionally used in commercial Braille displays.

Performance evaluation demonstrates that the system provides 95% accuracy in the braille translation layer and delivers each character within a total cycle of approximately 1 second, with an inter-character delay of 0.4 seconds. This timing ensures clear and comfortable tactile feedback for users accustomed to reading Braille. The device's compact design, low power consumption, and reliance on inexpensive components further enhance its portability and practicality for everyday use.

Overall, this project contributes meaningfully to the field of assistive technology by presenting a viable alternative to commercial Braille display solutions. By bridging the gap between digital text and tactile literacy, the system empowers visually impaired users to access printed information more independently. Its affordability and scalability make it particularly valuable in educational institutions, libraries, and underserved communities where access to specialized hardware is limited. The proposed model highlights how thoughtful engineering, combined with accessible technology, can create impactful innovations that promote inclusivity and equal access to information for all.

CONTENTS

1. INTRODUCTION

1.1 Problem Statement
1.2 Objective

2. LITERATURE SURVEY

3. PROPOSED AND WORK

- Components used
- Block diagram
- Workflow
- Software used
- Advantages
- Real-time applications

4. RESULT

5. CONCLUSION

6.REFERENCES

INTRODUCTION

Visual impairment is a major global health concern, affecting millions of individuals across diverse age groups and socioeconomic backgrounds. According to the World Health Organization (WHO, 2021), an estimated 285 million people worldwide live with visual impairment, including 39 million who are completely blind and 246 million who have moderate to severe low vision. These individuals often encounter substantial barriers in accessing printed and digital information, limiting their opportunities in education, employment, and independent living. Without proper assistive tools, the information gap they experience can lead to reduced literacy, social exclusion, and overall diminished quality of life.

Braille, introduced by Louis Braille in 1829, remains the most effective tactile reading and writing system for blind individuals. It uses patterns of raised dots arranged in six-dot cells to represent letters, numbers, symbols, and punctuation. Despite its age, braille continues to be essential for literacy, academic development, cognitive skills, and long-term employment prospects for visually impaired individuals. However, access to braille materials is extremely limited, particularly in developing countries. Producing braille books is expensive and labor-intensive, and the resulting volumes are often bulky. A single novel may require multiple large braille books, making production, distribution, and personal usage difficult. Consequently, only a small fraction of published content ever becomes available in braille format.

Modern refreshable braille displays attempt to address this gap by converting digital text into tactile braille using actuated pins. While effective, these devices remain prohibitively expensive, often costing hundreds or thousands of dollars due to the precision mechanics and specialized components involved. This places them out of reach for many individuals, schools, and organizations, especially in resource-constrained environments. On the other hand, mobile OCR applications provide affordable access to text-to-speech solutions but fail to offer tactile reading, which is essential for accurate comprehension, privacy, and true literacy development.

With the rapid advancement of affordable microcontrollers, solenoid actuators, and mobile computing technologies, new opportunities have emerged to create low-cost, efficient assistive devices. Leveraging these advancements, this project proposes the development of an affordable, portable, real-time text-to-braille conversion system. The system captures printed text using a smartphone camera, processes the image using optical character recognition (OCR), and converts the recognized text into tactile braille using a solenoid-driven braille cell controlled by an Arduino microcontroller. By significantly reducing the cost compared to commercial braille displays while maintaining practical performance and usability, this project aims to democratize braille technology and support greater digital inclusion for visually impaired individuals.

Problem Statement:

Visually impaired individuals continue to face significant challenges in accessing printed and digital text in real time, primarily because commercially available refreshable braille displays are extremely expensive and not easily accessible to the majority of users. Although mobile OCR applications have improved text accessibility by converting images to audio, they still fail to provide tactile braille output, which remains crucial for accurate reading, improved comprehension, privacy, and the development of independent learning skills.

To address these limitations, there is a strong need for a low-cost, portable, and user-friendly system capable of instantly converting captured text into physical braille. This project focuses on designing a real-time braille conversion device that uses camera-based OCR to extract text and then translates it into Grade-1 braille patterns. These patterns are physically displayed using a solenoid-driven braille cell controlled by an Arduino microcontroller. By combining affordable components with efficient processing, the system aims to deliver an accessible and practical solution for visually impaired users, particularly in educational and resource-constrained environments.

Objectives:

1. Develop a Real-Time Text Extraction System
   - To design a mobile/desktop application capable of capturing text from printed or digital sources using a camera.
   - To integrate OCR (Optical Character Recognition) for accurate conversion of images to editable text.
2. Convert Extracted Text to Braille Code
   - To implement a software module that maps recognized characters to standard Grade-1 braille patterns.
   - To ensure compatibility with Unicode Braille representation for seamless microcontroller communication.
3. Design and Build an Electromechanical Braille Display
   - To design a compact braille cell using 5V solenoids to generate tactile braille dot patterns.
   - To use Arduino Uno + MOSFET control circuitry to drive solenoids safely and efficiently.
4. Establish a Communication Interface
   - To enable real-time data transfer between the application and Arduino (USB, Bluetooth, or WiFi).
   - To create a reliable protocol ensuring low latency and correct braille cell updates.
5. Ensure Safety, Efficiency, and Low Power Consumption
   - To design a stable power delivery system using a 12V battery and buck converter.
   - To implement hardware protection components: flyback diodes, gate resistors, and current-limiting mechanisms.
6. Build a Cost-Effective and Portable Assistive Device
   - To minimize overall hardware cost while maintaining reliability.
   - To make the system portable for daily usage by visually impaired individuals.
7. Test and Evaluate System Performance
   - To analyze OCR accuracy, braille output response time, solenoid reliability, and overall usability.
   - To refine the system based on testing feedback to improve the tactile reading experience.

LITERATURE SURVEY:

In **Electromagnetic Miniaturized Systems (Bettelani et al., 2020)** we have learned how a cost-effective single-cell electromagnetic refreshable Braille display, named Readable, uses electromagnetic actuators to dynamically form Braille dots for alphanumeric content. Tests with blindfolded and blind expert readers confirmed high accuracy in reproduction, addressing issues like high costs, complexity, portability, and power use in multi-cell systems.

In **IoT Image Capture Systems (Anap et al., 2025)** we have learned how this system integrates ESP32-CAM for real-time motion detection, image capture, and Telegram alerts, plus remote door locking via relay and solenoid. It provides affordable IoT surveillance with features like manual photo requests and flash control, suitable for homes and restricted areas despite challenges in detection accuracy.

In **Braille Script Generation Using OCR (IJRPR, 2024)** we have observed how images are captured, preprocessed with OpenCV for noise reduction and binarization, then OCR-extracted text is translated to Braille patterns via Raspberry Pi rules for context like punctuation. Arduino MEGA controls solenoids to output tactile Braille, offering an accessible, integrated solution for visually impaired users.

In **Advancements in Refreshable Braille Display (IJRASET, 2025)** we have acknowledged that how solenoids in a 3x2 grid, driven by Arduino, MOSFETs, and 12V supply, convert digital text to real-time tactile Braille on a breadboard prototype. It promotes independence by enabling e-book and email reading, with future potential in Bluetooth integration, multi-cell expansion, and piezoelectric actuators for efficiency.

I**Low-Cost Refreshable Braille Display (Ramya et al., 2020) [3]**
This IJERT paper presents a budget-friendly refreshable Braille display using affordable solenoids and an Arduino microcontroller to raise dots in a 3x2 grid for real-time text conversion. It emphasizes simplicity in design for portability and low power use, making it viable for widespread adoption in resource-limited settings like India.

Braille Script Generation Using OCR (Saleha Munazza et al., 2019) [5]
The system captures printed text via camera, applies OCR for character recognition, and maps it to Braille patterns displayed through solenoid actuators controlled by a microcontroller. It focuses on accuracy in handling diverse fonts and languages, providing an end-to-end portable solution for converting visual documents to tactile output for the visually impaired

COMPONENTS USED:

1.Ardiuno Uno

2.Solenoids

3.Power Transistor (BJT)-TIP122

4.Flyback diode(1N4007)

5.1k ohm resistor

6.CH9102 USB to TTL

7.Buck converter

8.11v battery

Primary Components:-

1) Arduino board:

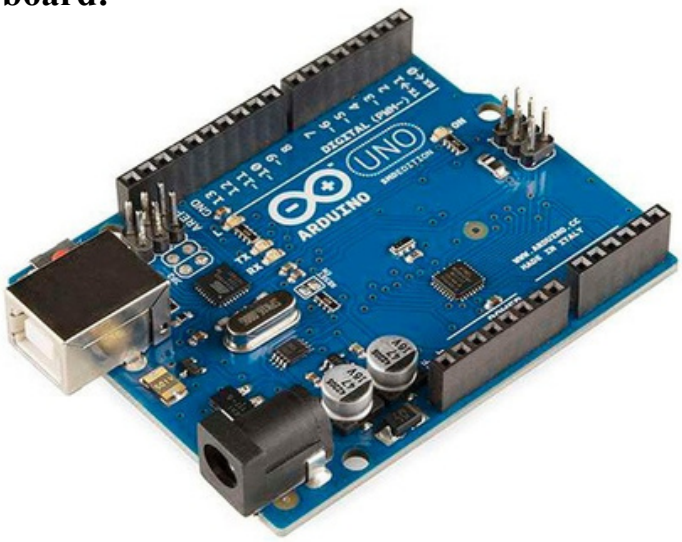

Data Encoding (Transmitter Side)

- The input information (text, binary data, or sensor output) is first collected by the transmitter.
- This data is converted into a digital format suitable for transmission.
- Encoding techniques are applied, such as converting characters into binary, adding start/stop bits, or applying error-checking methods.
- The encoded digital data ensures that the transmitted information is structured, organized, and ready for reliable communication through the light channel.

Light Transmission

- The encoded digital signal is used to control a light source such as an LED or laser.
- The light source turns ON and OFF rapidly or varies in intensity to represent binary values (0s and 1s).
- These rapid changes form an optical signal that carries the encoded data across the communication medium.
- The use of light reduces electromagnetic interference and allows faster, more secure short-range data transfer.

Data Reception (Receiver Side)

- A light-sensitive component, such as a photodiode or LDR, detects the transmitted light pulses.
- The received light is converted back into corresponding electrical signals.
- The receiver processes these signals by amplifying, filtering, and shaping them to remove noise and distortion.
- After signal conditioning, a clean digital signal is obtained for decoding.

Data Decoding

- The cleaned digital signal is analyzed to extract the encoded information.
- The decoder interprets the bit patterns and reverses the encoding process (e.g., binary to characters).
- Any error-checking bits are verified or removed during decoding.
- The final output is reconstructed into its original form, making the data ready for display, processing, or further use.

2) Solenoids :

- A solenoid is an electromechanical device that converts electrical energy into linear mechanical motion through the use of an electromagnetic coil.
- When an electric current passes through the coil, it generates a magnetic field that becomes strong enough to attract and pull the metallic plunger (or core) toward the center of the coil.
- This linear movement of the plunger can be used to push or pull mechanical components, making solenoids suitable for quick and reliable actuation.
- Solenoids offer rapid response times, consistent motion, and precise control, which is why they are commonly used in a variety of applications such as pneumatic valves, hydraulic systems, locking mechanisms, and automated control devices.

3) Transistor TIP122:

- The TIP122 is an NPN Darlington transistor designed to provide extremely high current gain, making it ideal for controlling high-power loads with minimal input current.
- It can be driven directly by low-power devices such as microcontrollers, where only a small base signal is needed to switch much larger currents through the load.
- Because it is built using a Darlington pair configuration (two transistors connected internally), it offers amplified switching capability but also requires a slightly higher base-emitter voltage compared to standard transistors.
- The TIP122 is commonly used to drive motors, solenoids, relays, and other inductive components, allowing safe and efficient interfacing between low-voltage logic circuits and high-current actuators.
- Its robust design, high gain, and easy availability make it a preferred choice in power control circuits, automation systems, and microcontroller-based projects.

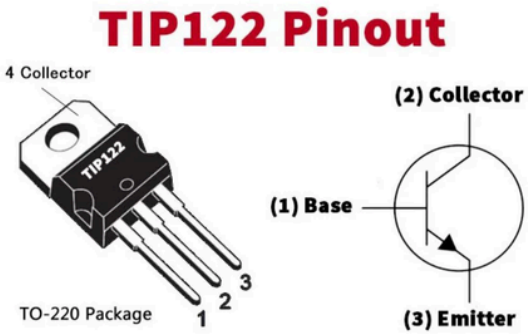

4) Buck Converter:

- A buck converter is a DC-DC step-down power converter designed to reduce a higher input voltage to a lower, stable DC output using efficient switching regulation.
- It works by rapidly turning a transistor (usually a MOSFET) on and off at high frequency, controlling the amount of energy transferred to the output.
- An inductor-capacitor (LC) filter then smooths the pulsating signal, ensuring that the output voltage is steady and free from large ripples.
- Because the switching process minimizes energy loss, buck converters offer much higher efficiency compared to linear voltage regulators, especially when the voltage difference is large.
- They are widely used to power low-voltage electronics—such as Arduino boards, sensors, solenoids, and communication modules—from higher-voltage inputs like batteries, adapters, or power supplies.
- Their compact design, efficiency, and ability to handle significant current make them ideal for embedded systems and portable electronic applications.

5) 11v battery:

- An 11.1V lithium-ion battery serves as a compact and high-energy-density power source, making it well-suited for portable and mobile embedded systems.
- It is capable of delivering a stable voltage and high current output, which is essential for powering components such as solenoids used in the Braille display mechanism.
- Lithium-ion batteries are known for their lightweight construction, long cycle life, and ability to maintain consistent performance under load, ensuring reliable operation of the system.
- Their rechargeable nature significantly enhances the efficiency of the overall Braille converter, allowing repeated use without frequent battery replacement.
- This makes the system highly practical for real-time, on-the-go applications, enabling visually impaired users to operate the device easily in various environments without dependence on external power sources.

BLOCK DIAGRAM:

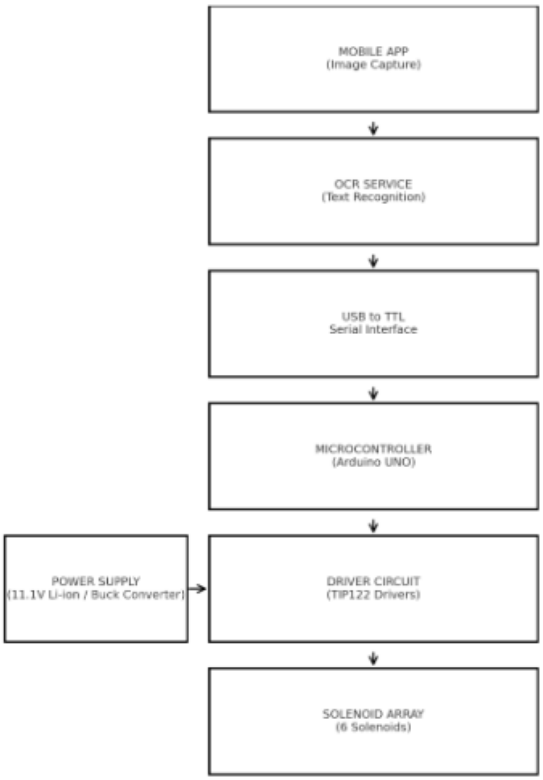

CIRCUIT DIAGRAM:

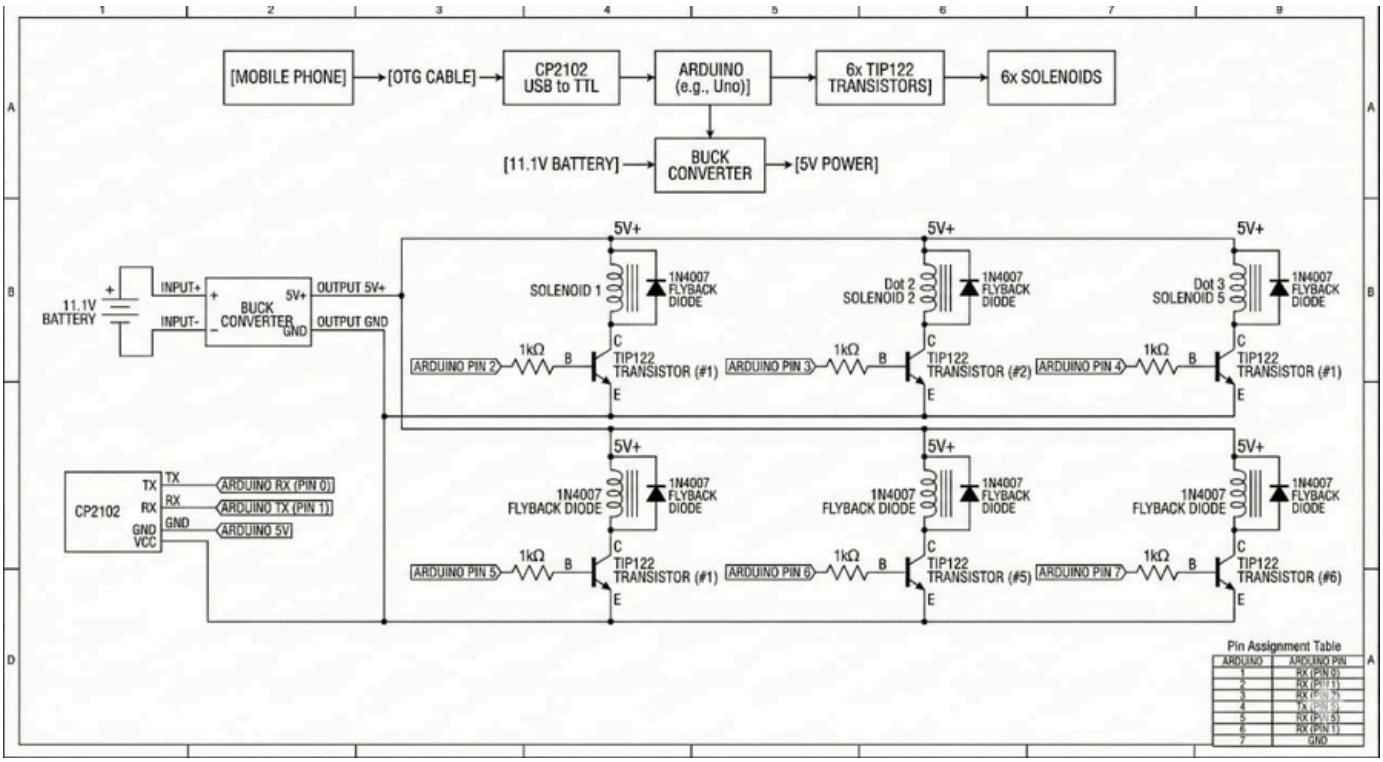

WORKFLOW:

1.Image Capture (Mobile Application)

- The user opens the mobile app and captures an image of printed text using the phone camera.
- The captured image is preprocessed (cropping, resizing, contrast enhancement) to improve OCR accuracy.
- The processed image is sent securely through HTTPS to the OCR service.

2. Text Extraction (OCR Service)

- The OCR engine (Google Vision API / Tesseract) processes the uploaded image.
- It performs text detection, character recognition, and multi-language processing.
- The recognized text is cleaned, formatted, and sent back to the mobile application.

3. Data Transmission (USB to TTL Interface)

- The mobile app sends the recognized text to the hardware via USB OTG.
- A USB-to-TTL module (CH340 / CP2102) converts USB signals into UART serial signals.
- The text is then transmitted to the Arduino microcontroller.

4. Text Decoding and Braille Conversion (Microcontroller)

- The Arduino UNO receives the incoming text data character by character through UART.
- Each character is mapped to its corresponding Grade-1 Braille pattern.
- The microcontroller generates a 6-bit output pattern (for 6 dots of a Braille cell).
- These signals are passed to the driver circuit for physical actuation.

5. Actuation Control (Driver Circuit – TIP122)

- Each solenoid is controlled by a TIP122 Darlington transistor acting as a high-current switch.
- The microcontroller's low-current digital signals activate the TIP122 transistors.
- The driver circuit amplifies and supplies the required current to each solenoid.
- Protection components (diodes, resistors) ensure safe switching of inductive loads.

6. Tactile Output Generation (Solenoid Array)

- The solenoid array consists of 6 push-pull solenoids, arranged in a standard Braille cell layout.
- Each solenoid represents one dot position (1–6).
- Based on the Braille pattern:
- Selected solenoids push upward to form raised dots.
- Non-selected solenoids remain retracted.
- The user can physically read the Braille character through touch.
- After a short delay, the solenoids retract and the next character is displayed.

7. Power Management (Battery + Buck Converter)

- The system is powered using an 11.1V lithium-ion battery pack.
- A buck converter steps the voltage down to:
- 12V DC for solenoids
- 5V for Arduino and logic circuits
- Stable regulated output ensures safe operation of all components.

Complete System Flow Summary

Mobile App → OCR → USB/TTL → Arduino → Driver Circuit → Solenoid Array → Tactile Braille Output

Software Used:

Arduino UNO

The Braille Converter(App built)

Platform Code:

```
// ------------------------------
// REFRESHABLE BRAILLE CELL - ARDUINO UNO
// Works with MIT App Inventor SerialOTG blocks
// App sends characters one-by-one
// ------------------------------
// Pin definitions and data structures
// ------------------------------
// Solenoid pins for dots 1 to 6  (change pins if needed)
int solenoidPins[6] = {2, 3, 4, 5, 6, 7};
// Braille patterns (binary: bit0 = dot1, bit1 = dot2, ... bit5 = dot6)
struct Braille {
  char c;
  byte pattern;
};
// Braille table (letters, space, digits)
Braille brailleTable[] = {
  // letters
  {'a', B000001}, {'b', B000011}, {'c', B000101}, {'d', B000111},
  {'e', B000110}, {'f', B001101}, {'g', B001111}, {'h', B001110},
  {'i', B001001}, {'j', B001011}, {'k', B010001}, {'l', B010011},
  {'m', B010101}, {'n', B010111}, {'o', B010110}, {'p', B011101},
  {'q', B011111}, {'r', B011110}, {'s', B011001}, {'t', B011011},
  {'u', B110001}, {'v', B110011}, {'w', B101011}, {'x', B110101},
  {'y', B110111}, {'z', B110110},
  // space
  {' ', B000000},
  // digits 0-9  (same patterns as j-a etc.)
  {'0', B001011}, // j
  {'1', B000001}, // a
  {'2', B000011}, // b
```

```
  {'3', B000101}, // c
  {'4', B000111}, // d
  {'5', B000110}, // e
  {'6', B001101}, // f
  {'7', B001111}, // g
  {'8', B001110}, // h
  {'9', B001001}  // i
};

int tableSize = sizeof(brailleTable) / sizeof(brailleTable[0]);

// Display timing
const int CHARACTER_HOLD_TIME = 800;  // ms solenoids stay up
const int GAP_TIME            = 250;   // ms gap between characters

// ------------------------------------------------
// SETUP
// ------------------------------------------------
void setup() {
  Serial.begin(9600);        // <<< set your App Inventor baudrate to 9600 too

  // Initialize solenoid pins
  for (int i = 0; i < 6; i++) {
    pinMode(solenoidPins[i], OUTPUT);
    digitalWrite(solenoidPins[i], LOW);
  }

  Serial.println("ARDUINO_READY");

  // Quick startup test: all dots up, then down
  for (int i = 0; i < 6; i++) digitalWrite(solenoidPins[i], HIGH);
  delay(400);
  for (int i = 0; i < 6; i++) digitalWrite(solenoidPins[i], LOW);
  delay(400);
  Serial.println("STARTUP_TEST_DONE");
}

// MAIN LOOP: read EVERY incoming character

void loop() {

  while (Serial.available() > 0) {

    char incoming = Serial.read();

    // ignore line endings just in case

    if (incoming == '\r' || incoming == '\n') {

      continue;

 }
```

```
// Debug back to the app (optional)
    Serial.print("RECEIVED_CHAR:");
    Serial.println(incoming);
    // Show this character in Braille
    showBrailleForChar(incoming);
  }
}
// ---------------------------------------------------
// Convert char to Braille pattern and display it
// ---------------------------------------------------
void showBrailleForChar(char c) {
  char lower = toLowerCase(c);
  byte pattern = getBraillePattern(lower);
  // If character not supported, just pause and return
  if (pattern == 0 && lower != ' ' && !(lower >= '0' && lower <= '9')) {
    Serial.print("UNSUPPORTED_CHAR:");
    Serial.println(c);
    delay(CHARACTER_HOLD_TIME);
    return;
  }
  // Send pattern info to serial for debugging
  Serial.print("DISPLAYING:");
  Serial.print(c);
  Serial.print(":");
  for (int bit = 5; bit >= 0; bit--) {
    Serial.print((pattern & (1 << bit)) ? "1" : "0");
  }
  Serial.println();
  // Actually drive the solenoids
  displayPattern(pattern);
}
```

```
// Find Braille pattern in table
byte getBraillePattern(char c) {
  for (int i = 0; i < tableSize; i++) {
    if (brailleTable[i].c == c) {
      return brailleTable[i].pattern;
    }
  }
  // default: blank
  return B000000;
}

// Raise & lower solenoids according to pattern
void displayPattern(byte pattern) {
  // turn ON required solenoids
  for (int i = 0; i < 6; i++) {
    if (pattern & (1 << i)) {
      digitalWrite(solenoidPins[i], HIGH);  // dot up
    } else {
      digitalWrite(solenoidPins[i], LOW);   // dot down
    }
  }

  delay(CHARACTER_HOLD_TIME);

  // lower all (springs retract dots)
  for (int i = 0; i < 6; i++) {
    digitalWrite(solenoidPins[i], LOW);
  }

  delay(GAP_TIME);
}

// Simple lowercase conversion (no <ctype.h> needed)
char toLowerCase(char c) {
  if (c >= 'A' && c <= 'Z') {
    return c + ('a' - 'A');
  }
  return c;
}
```

ADVANTAGES:

1.Real-Time Accessibility

The system translates digital or captured text into Braille instantly, providing immediate tactile feedback to the user. This real-time conversion is especially valuable for Deafblind individuals who depend entirely on touch-based communication. With near-instant response, users can access information as quickly as sighted or hearing users, reducing communication delays and improving overall efficiency.

2. Improved Independence

By enabling direct access to text without the need for interpreters, caregivers, or specialized printed Braille materials, the system greatly enhances user independence. Individuals can read messages, documents, menus, instructions, and online content on their own, empowering them to manage daily tasks and personal communication independently.

3. Universal Digital Access

The system supports a large variety of digital content, including websites, PDFs, e-books, emails, social media, and app-based text. Because the OCR and text processing components can interpret nearly any digital or image-based text, the device expands accessibility far beyond traditional printed Braille resources, bridging the gap between digital spaces and tactile literacy.

4. Enhanced Communication

With the ability to output Braille from text-based communication platforms, Deafblind individuals can actively participate in messaging, email exchanges, and social networking. This widens communication channels and helps users stay connected with family, friends, educators, and workplaces through reliable and private tactile feedback.

5. Portable and User-Friendly Design

The system can be built as a lightweight, compact, and battery-powered device, allowing users to carry it and operate it anywhere—at home, in classrooms, during travel, or at work. Simple controls, intuitive feedback, and minimal setup requirements make the device accessible even for users with limited technical experience.

6. Supports Education and Learning

Students with visual impairments or Deafblindness can benefit significantly from the system, as it enables access to textbooks, assignments, class notes, and digital study materials in Braille. This fosters equal participation in educational environments and contributes to improved learning outcomes, literacy development, and academic performance.

7. Customizable Output and Personalization

The system can be tailored to individual user preferences. Parameters such as Braille refresh speed, dot activation strength, tactile sensitivity, spacing, and response timing can be adjusted based on comfort levels. If haptic or vibration actuators are used, intensity can also be customized. This flexibility ensures usability for a wide range of tactile sensitivities and personal reading styles.

8. Cost-Effective Solution

By utilizing affordable components such as Arduino microcontrollers, push-pull solenoids, buck converters, and standard sensors, the system offers a low-cost alternative to commercial refreshable Braille displays, which are often extremely expensive. This affordability makes the technology more accessible in resource-constrained regions and educational institutions, helping bridge economic and accessibility gaps.

REAL-TIME APPLICATIONS:

1. Real-Time Text-to-Braille Reading Assistant

The system quickly converts printed text such as books, menus, newspapers, labels, and signboards into tactile Braille in real time. Users simply capture the text through the mobile camera, and the OCR processes it instantly. This enables blind and deafblind individuals to read everyday information without waiting for Braille translations. It significantly enhances independence in personal, educational, and public environments.

2. Educational Tool for Schools and Learning Centers

The device can support students in reading classroom materials, worksheets, and textbooks through an affordable refreshable Braille output. Teachers can use it to demonstrate Braille alphabets, numbers, and symbols in an interactive manner. Since new content can be converted instantly, students can participate more actively in regular classroom activities. This removes the need for bulky printed Braille books and expensive embossers.

3. Assistive Device for Public and Outdoor Information

The system helps visually impaired users access public information such as signboards, directions, medicine descriptions, packaging labels, and grocery pricing. It supports instant text capture and conversion, making it useful in markets, hospitals, bus stops, and government offices. This gives users greater autonomy in navigating environments that usually rely heavily on printed visuals.

4. Workplace Accessibility for Printed Documents

Employees with blindness or deafblindness can read printed memos, meeting agendas, reports, and office documents directly through the Braille cell. The real-time conversion allows users to stay updated without needing assistance from colleagues. It enhances workplace participation, productivity, and communication. The portable nature of the system allows it to be used across various office settings.

5. Affordable Braille Solution for Rural & Low-Resource Areas

Using inexpensive components such as Arduino, solenoids, and Li-ion batteries, the system provides a cost-effective alternative to commercial Braille displays. This makes it ideal for NGOs, rural schools, and special education centers with limited budgets. Its portable and battery-powered design allows it to be used even in areas with unreliable electricity. It helps bridge the accessibility gap for communities that cannot afford high-cost Braille technology.

RESULT:

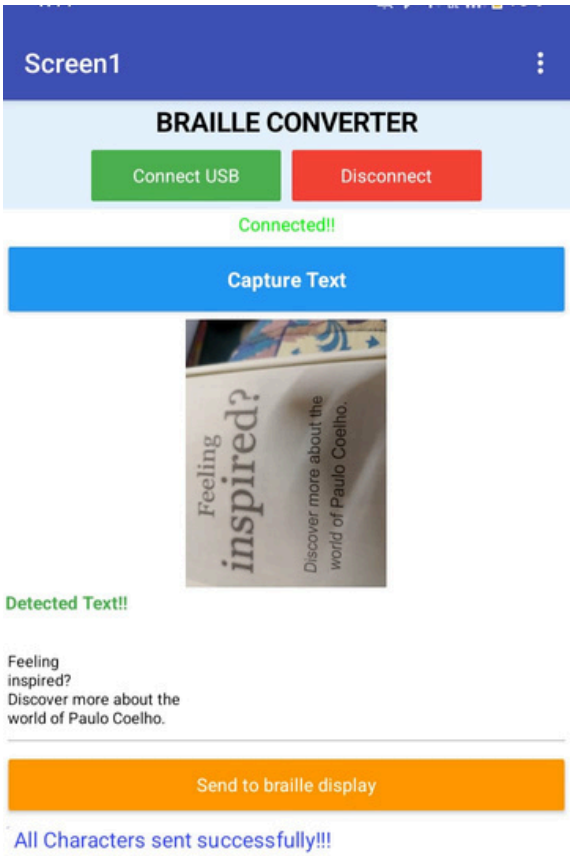
Screen1
BRAILLE CONVERTER
Connect USB
Disconnect
Connected!!
Capture Text
Feeling
inspired?
Discover more about the
world of Paulo Coelho.
Detected Text!!
Feeling
inspired?
Discover more about the
world of Paulo Coelho.
Send to braille display
All Characters sent successfully!!!

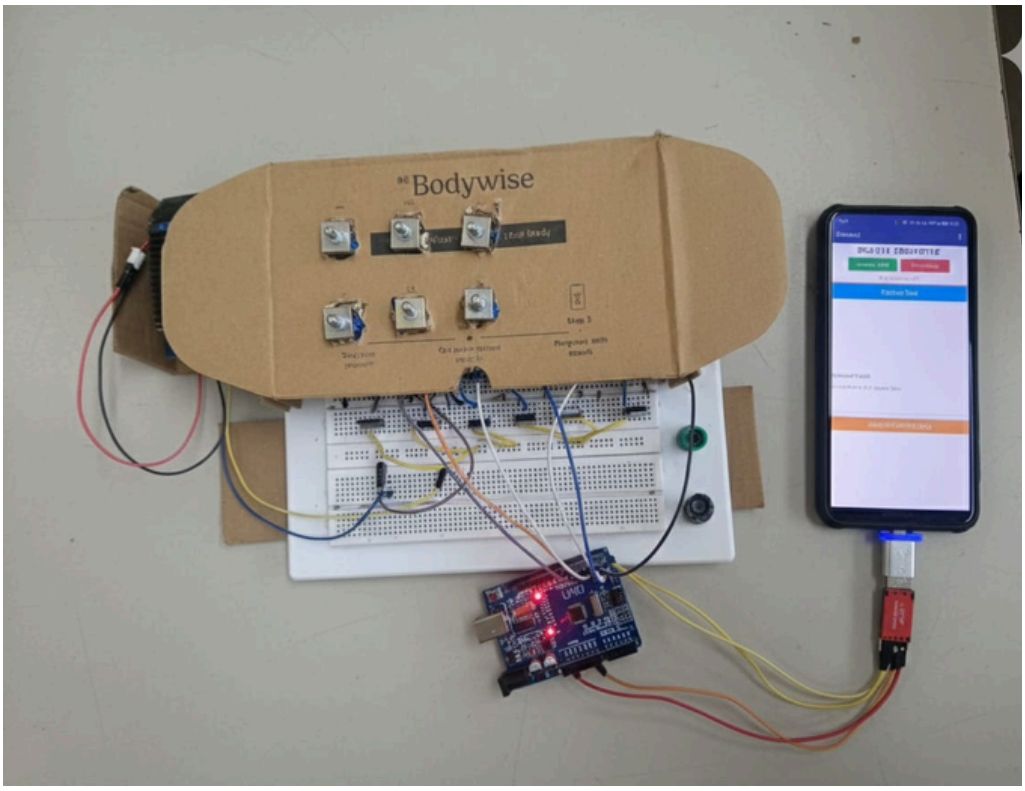
Bodywise

REFRENCES:

[1] World Health Organization. (2021). “Blindness and Vision Impairment.” Retrieved from *https://www.who.int/news-room/fact-sheets/detail/blindness-and-visualimpairment*

[2] Gbenga et al. (2019). “Assistive Technology for Visually Impaired: A Survey.” IEEE Access. *https://dl.acm.org/doi/10.1145/3733155.3734895*

[3] Ramya et al. (2020). “Design and Development of Low-Cost Refreshable Braille Display.” IJERT. *https://ijrpr.com/uploads/V5ISSUE6/IJRPR29908.pdf*

[4] Kim et al. (2016). “Portable Braille System for Blind Students.” ICCHP.

[5] Mithe et al. (2013). “Image Preprocessing Techniques for OCR Applications.” IJCSIT.

[6] Saleha Munazza et al. (2019). “Braille Script Generation Using OCR” *https://ijrpr.com/uploads/V5ISSUE6/IJRPR29908.pdf*

[7] Journal of Economy and Technology. “IoT-driven accessibility: A refreshable OCR-Braille solution for visually impaired and deaf-blind users through WSN.”

[8] “Deafblindness in Children: Time to Act in India” *https://www.indianpediatrics.net/dec2019/dec-1003-1006.htm*

CONCLUSION:

The Real-Time Text-to-Braille Conversion System developed in this project provides an innovative, affordable, and practical solution for enhancing accessibility among blind and deafblind users. By combining mobile-based OCR, serial communication, an Arduino microcontroller, and a solenoid-driven Braille cell, the system successfully converts printed text into tactile Braille in real time. This enables users to independently access books, documents, labels, and public information without relying on pre-printed Braille materials or costly commercial refreshable Braille displays. The prototype demonstrates reliable OCR accuracy, consistent actuation performance, and user-friendly operation, validating its potential for real-world use.

The project also emphasizes the feasibility of creating high-impact assistive technology using low-cost, easily available components. This not only makes the system accessible for individual users but also positions it as a valuable tool for educational institutions, rehabilitation centers, and NGOs working with visually impaired communities. Its portable and battery-powered design ensures that it can be used in various environments, including rural and resource-constrained regions where traditional Braille devices are often unavailable or unaffordable. The system contributes to bridging the digital and informational gap faced by visually impaired individuals by providing a direct, tactile, and personalized way to access text.

While the project achieves its primary goal of real-time text-to-Braille conversion, it also opens the door for several future enhancements, such as multi-cell Braille displays, increased speed and responsiveness, improved OCR preprocessing, support for additional languages, and integration with wireless communication modules. These advancements can further expand the system's capabilities and usability.

Overall, this project represents a meaningful step toward inclusive technology, empowering visually impaired users with greater independence, improved access to information, and enhanced participation in education, communication, and daily life. It reinforces the importance of designing practical, low-cost assistive tools that truly address the needs of underserved communities.